EFI 06-21
hep-ph/yymmnnn
October, 2006

UNCOVERING THE NATURE OF THE WEAK INTERACTION [1]

Jonathan L. Rosner
Enrico Fermi Institute and Department of Physics, University of Chicago
5640 South Ellis Avenue, Chicago, IL 60637

This brief review traces the development of our understanding of the weak interactions, highlighting Jim Cronin's contributions through his studies of strange particle decays and the developments to which they led.

1 INTRODUCTION

The history of the weak interactions may be said to have begun with the discovery of beta-decay by Henri Becquerel at the end of the 19th Century [1]. It is still evolving. Insights are expected from experiments ranging from neutrinoless double beta-decay to giant cosmic ray air showers. It has benefitted greatly from Jim Cronin's studies of strange particles, including but not limited to his discovery of CP violation with Christenson, Fitch, and Turlay [2].

In a thirty-minute talk (or a written version thereof) it is impossible to do justice to this rich 110-year history. Jim entered the world roughly nine months after Pauli's December 4, 1930 proposal of the neutrino [3], but was already a practicing physicist when its discovery was announced [4]. I would like to touch upon some high points, paying special heed to the term "uncovering." Jim has been on the front-line of this effort. The fundamental weak interactions often have been overlaid with strong interactions and kinematic correlations, whose understanding is needed to draw conclusions about the underlying physics. For example:

1. In nuclear beta-decay, $0 \to 0$ ("Fermi") transitions have proven especially simple to describe. Complications of nuclear matrix elements, often plaguing interpretations, are at a minimum for these transitions.

2. In the discovery that the weak interactions violated parity conservation, a key role was played by Dalitz's "phase space plots" [5].

3. The nucleon axial-vector coupling, a pure number differing from unity, was related to strong-interaction parameters by Goldberger and Treiman [6].

4. Nonleptonic hyperon decays to a pion and a baryon can proceed in general both through parity-violating S-wave and parity-conserving P-wave decays. The interference of these two amplitudes can lead to decay asymmetries and provide tests of time-reversal invariance.

[1] Invited talk presented at Jim Cronin's 75 birthday celebration, Chicago, September 8–9, 2006

5. The comparison of $K_{\mu 3}$ and K_{e3} semileptonic decays provides a test of lepton universality in the weak interactions, but also allows one to distinguish two independent form factors in the $K \to \pi$ weak transition. These decays provide fundamental information about strangeness-changing weak decays once such questions are resolved.

6. Hyperon semileptonic beta-decays [7] also give useful information about strangeness-changing weak decays once one understands patterns of baryonic matrix elements of the weak current.

7. The interpretation of the phase of the CP-violating amplitude in neutral kaon decays requires one to understand S-wave pion-pion scattering at a center-of-mass energy equal to the neutral kaon mass.

8. The algebra of currents [8] extracted some essential features of quarks without the need for them to be real entities. It pointed the way to the necessary features of a strong-interaction theory.

9. The charmed quark played a key role in unifying the weak and electromagnetic interactions. Interpretation of initial evidence for it was greatly facilitated by the emerging theory of the strong interactions, quantum chromodynamics (QCD).

10. A candidate theory of CP violation, proposed by Kobayashi and Maskawa more than thirty years ago [9], has passed all tests so far with flying colors. Some of these tests, using mesons containing the fifth ("b") quark, require one to separate strong-interaction and weak-interaction effects; others are unaffected by strong interactions. As in so many of the above cases, the trick lies in recognizing which measurements yield the most fundamental quantities.

There are many more such examples. We shall discuss items #4 (nonleptonic hyperon decays), #6 (semileptonic hyperon decays), #9 (charm), and #10 (the Kobayashi-Maskawa theory) in subsequent sections.

2 NONLEPTONIC HYPERON DECAYS

When the weak interactions were shown to violate parity conservation, a natural expectation was the expectation that hyperon decays would also violate parity [10]. By the late 1950s, parity violation had been seen in polarized Λ decays, manifested by an up-down asymmetry of protons in $\Lambda \to \pi^- p$ produced in $\pi^- p \to \Lambda K^0$. Did it occur in Σ decays? Jim Cronin played a key role in sorting out such decays as $\Sigma^+ \to \pi^+ n$, $\Sigma^+ \to \pi^0 p$, and $\Sigma^- \to \pi^- n$ [11] and performing tests of time-reversal violation in $\Lambda \to \pi^- p$ [12].

The amplitudes for transitions $(J^P = 1/2^+) \to (J^P = 0^-) + (J^P = 1/2^+)$, where J denotes total angular momentum and P denotes parity, can be S-wave ("s," parity-violating) or P-wave ("p," parity-conserving). Decays are fully characterized by the

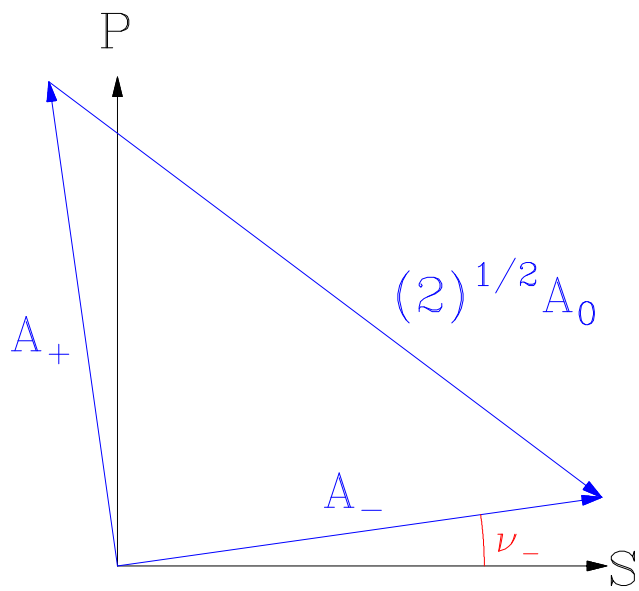

Figure 1: Triangle formed by amplitudes for $\Sigma \to \pi N$ decays.

parameters

$$\Gamma \sim |s|^2 + |p|^2 \ , \ \alpha \equiv 2 \ \mathrm{Re}(sp^*)/(|s|^2 + |p|^2) \ , \ \beta \equiv 2 \ \mathrm{Im}(sp^*)/(|s|^2 + |p|^2) \ , \quad (1)$$

$$\gamma \equiv (|s|^2 - |p|^2)/(|s|^2 + |p|^2) \ , \quad \alpha^2 + \beta^2 + \gamma^2 = 1 \ . \quad (2)$$

The parameter β is a coefficient of a T-violating observable in the decay, and is expected to have a specific non-zero value as a result of final-state interactions.

2.1 $\Sigma \to \pi N$ and its interpretation

In Ref. [11] Cronin and his collaborators measured $\alpha\mathcal{P}$, where $\mathcal{P}$ denotes the hyperon polarization, via the $\Sigma^\pm$ decay asymmetry with respect to the plane formed by the incident beam and the recoiling hyperon, for example in $\pi^- p \to \Sigma^- K^+$ or $\pi^+ p \to \Sigma^+ K^+$. They found $\alpha(\Sigma^+ \to \pi^0 p)\mathcal{P}(\Sigma^+) = 0.70 \pm 0.30$, with $\alpha(\Sigma^+ \to \pi^+ n)\mathcal{P}(\Sigma^+) = 0.02 \pm 0.07$ for an initial beam momentum of 1 GeV/c, and $\alpha(\Sigma^- \to n\pi^-)\mathcal{P}(\Sigma^-)$ consistent with 0 at beam momenta 1 and 1.1 GeV/c. They thus concluded that parity violation is large in $\Sigma^+ \to \pi^0 p$. However, they were able to extend the implications of their measurements considerably with the following observations: (1) The rates for all three $\Sigma \to \pi N$ decays are nearly equal; (2) The nonleptonic weak interaction greatly favors transitions with $\Delta I = 1/2$ over those with $\Delta I = 3/2$.

The $\Delta I = 1/2$ rule implies $A_+ + \sqrt{2}A_0 = A_-$, where the subscript denotes the pion charge, so the amplitudes $A_\pm$ and $\sqrt{2}A_0$ form an isosceles right triangle shown in Fig. 1, where the axes denote S-wave and P-wave amplitudes.

One can show that the decay asymmetry parameters α for the three decays are related to one another by $\alpha^- = -\alpha^+ \equiv \sin 2\nu_-$, $\alpha^0 = \pm \cos 2\nu_-$, where the superscript denotes the pion charge. The $\pm$ sign occurs because the triangle could have been

drawn reflected about A_-. In the context of equal rates for all $\Sigma \to \pi N$ decays and the $\Delta I = 1/2$ rule, Cronin and his colleagues interpreted the data to imply

$$\alpha^+ = -\alpha^- \leq \pm(0.03 \pm 0.11) \ , \quad \alpha^0 = \pm(0.99 \pm 0.01) \ . \tag{3}$$

The current (2006) values [13] are $\alpha^+ = 0.068 \pm 0.013$, $\alpha^- = -0.068 \pm 0.008$, $\alpha^0 = -0.980^{+0.017}_{-0.015}$, very close to those measured nearly forty years ago.

2.2 Measurement of (α, β) in $\Lambda \to \pi^- p$

Measurements of an up-down asymmetry with respect to a production plane, such as those just described, provide only the product $\alpha\mathcal{P}$ of the asymmetry parameter and the polarization. To measure α separately one needs the polarization of the final baryon, for example that of the proton in $\Lambda \to \pi^- p$.

Cronin and Overseth [12] measured $\mathcal{P}(p)$ from scattering of the final proton in carbon plates. (See Ref. [14] for instrumental details.) They found $\alpha = 0.62 \pm 0.07$, to be compared with the present value of 0.642 ± 0.013 [13], and $\beta = 0.18 \pm 0.24$, to be compared with the present value $\tan^{-1}(\beta/\alpha) = (8 \pm 4)^\circ)$ [13]. From these measurements and one of $\gamma = 0.78 \pm 0.06$ they concluded that the $|p/s|$ ratio was small. When combined with information on hypernuclei, this allowed them to conclude that the relative $K\Lambda N$ parity was odd. Thus, if the K and π both had the same (odd) parity, as predicted if they belonged to the same SU(3) multiplet, the proton and Λ would also have the same (even) parity, in accord with their assignment to the same SU(3) octet.

3 STRANGE PARTICLE SEMILEPTONIC DECAYS

Strangeness-changing $|\Delta S| = 1$ weak semileptonic decays were seen to be suppressed in comparison with those having $\Delta S = 0$. This led Gell-Mann and Lévy [15] to propose a weak current taking $p \leftrightarrow n \cos\theta + \Lambda \sin\theta$. Cabibbo [7] generalized this; in quark language his form of the transition reads $u \leftrightarrow d \cos\theta + s \sin\theta$. His approach used SU(3) symmetry to relate matrix elements of the weak current to one another.

The mesons and baryons to which Cabibbo's proposal applied are shown in Fig. 2, along with the lightest three quarks. The proposal implied $\Delta S = \Delta Q$ in weak semileptonic decays and successfully described such transitions as $n \to pe^-\bar{\nu}_e$, $\Lambda \to pe^-\bar{\nu}_e$, $\Sigma^- \to \Lambda e^-\bar{\nu}_e$, $\Sigma^- \to ne^-\bar{\nu}_e$, $\Xi^- \to (\Sigma^0, \Lambda)e^-\bar{\nu}_e$, $\Xi^0 \to \Sigma^+ e^-\bar{\nu}_e$, $K^- \to \pi^0 e^-\bar{\nu}_e$, and $\bar{K}^0 \to \pi^+ e^-\nu_e$. The latest average [13] (including a key Chicago measurement [16]) is $\sin\theta = 0.2257 \pm 0.0021$. The Chicago contribution relied on an understanding of form factors in K_{e3} and $K_{\mu 3}$ decay [17] which has a long history including important early contributions by Jim Cronin and collaborators at Saclay [18]. Cronin's reviews of the weak interactions in the late 1960s give a good picture of the emerging success of the Cabibbo theory [19].

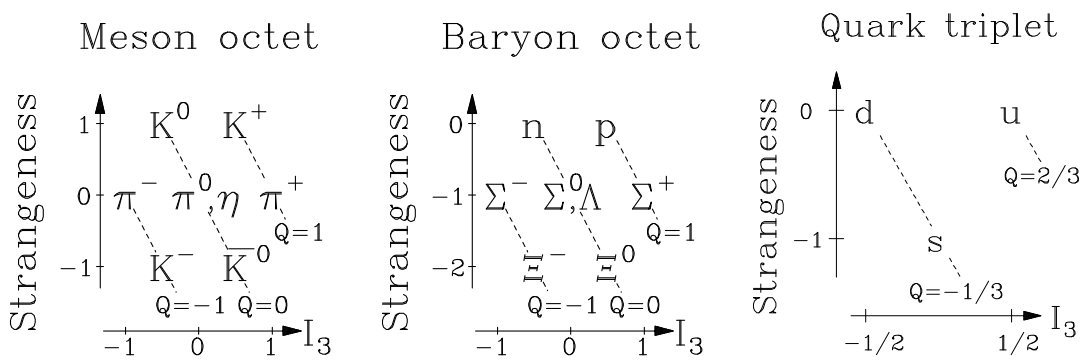

Figure 2: Plots of strangeness vs. third component of isotopic spin (I_3) for meson and baryon octets and quarks.

4 WEAK LEPTONIC, HADRONIC CURRENTS

The Fermi interaction (including parity violation) was described by a Hamiltonian density

$$\mathcal{H}_W = (G_F/\sqrt{2})(J^{\text{lepton}} + J^{\text{hadron}})_\alpha (J^{\dagger\ \text{lepton}} + J^{\dagger\ \text{hadron}})^\alpha \quad . \tag{4}$$

Since 1962 it was known that each lepton e^-, μ^- had its own neutrino ν_e, ν_μ, so the weak charge-changing current of leptons could be written

$$J_\alpha^{\text{lepton}} = \bar{\nu}_e \gamma_\alpha (1-\gamma_5) e + \bar{\nu}_\mu \gamma_\alpha (1-\gamma_5)\mu \quad . \tag{5}$$

The spatial integral $Q^{(+)} = \frac{1}{2}\int d^3x J_0^{\text{lepton}}$ of its time-component satisfies *commutation relations* with its Hermitian adjoint $Q^{(-)} = Q^{(+)\dagger}$:

$$Q_3 \equiv \frac{1}{2}[Q^{(+)}, Q^{(-)}],\ [Q_3, Q^{(\pm)}] = \pm Q^{(\pm)} \quad . \tag{6}$$

These are just the commutation relations of SU(2), with $Q^{(+)}$ acting as a "raising operator," and serve to normalize the leptonic current. Gell-Mann (1962) proposed similar commutation relations [for SU(3) and vector, axial currents] to normalize the weak currents of *hadrons*. With $J_\alpha^{\text{hadron}} = \bar{u}\gamma_\alpha(1-\gamma_5)(d\cos\theta + s\sin\theta)$, Q_3^{hadron} has terms inducing $s \leftrightarrow d$. These are harmless if Q_3 doesn't couple to anything. However, the electroweak theory of Glashow [20], Weinberg [21], and Salam [22] implied that it *does*, in contradiction to experiment. For this reason Weinberg entitled his model "A Theory of Leptons."

4.1 From Fermi to the electroweak theory

Many authors, starting with Yukawa, in order to avoid the singular 4-fermion interaction of the Fermi theory, proposed that weak interactions were due to exchange of an intermediate boson W [23], as shown in Fig. 3. Charged W's would be members $(W_1 \pm iW_2)/\sqrt{2}$ of an SU(2) triplet. However, the photon could not be the neutral member; its coupling doesn't violate parity. To solve this problem, Glashow [20] proposed an extension to SU(2) $\times$ U(1), implying the existence of an additional neutral

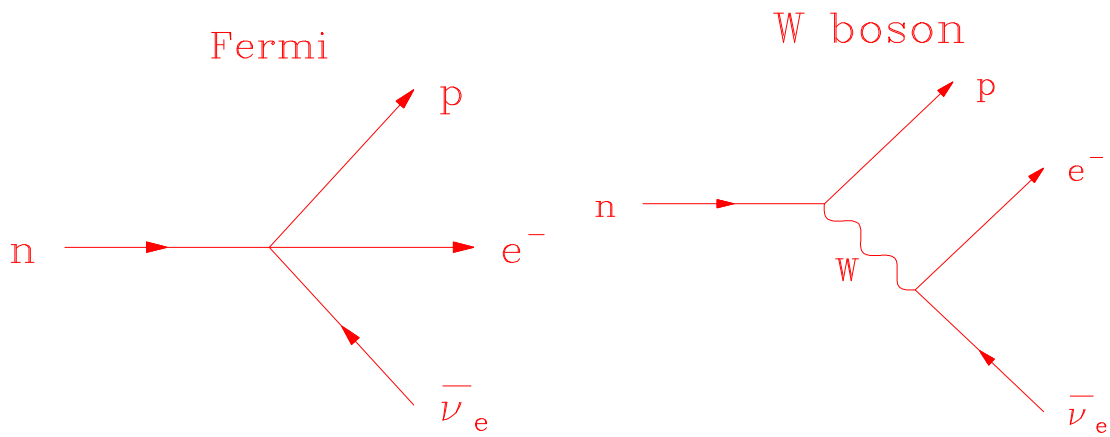

Figure 3: Fermi (left) and W boson (right) pictures of charge-changing weak interactions.

Table I: Pattern of couplings in the four-quark theory involving the quarks $u,\ d,\ c,\ s$

Leptons	Quarks	Quark mixing
$\begin{pmatrix} \nu_e \\ e^- \end{pmatrix} \begin{pmatrix} \nu_\mu \\ \mu^- \end{pmatrix}$	$\begin{pmatrix} u \\ d' \end{pmatrix} \begin{pmatrix} c \\ s' \end{pmatrix}$	$\begin{pmatrix} d' \\ s' \end{pmatrix} = \begin{pmatrix} \cos\theta & \sin\theta \\ -\sin\theta & \cos\theta \end{pmatrix} \begin{pmatrix} d \\ s \end{pmatrix}$

boson Z with $M_Z > M_W$. The photon and Z are then orthogonal mixtures of W_3 and the U(1) boson B. To break the SU(2) $\times$ U(1) symmetry, Weinberg [21] and Salam [22] utilized the Higgs mechanism, entailing the existence of a spinless boson which is still the subject of intense searches.

4.2 Neutral currents and charm

The leptonic Q_3 calculated from Eq. (6) takes $e \leftrightarrow e$, $\mu \leftrightarrow \mu$, $\nu_e \leftrightarrow \nu_e$, $\nu_\mu \leftrightarrow \nu_\mu$, i.e., the neutral current is *flavor-preserving*. Can this be arranged for quarks? By pursuing a quark-lepton analogy, Bjorken and Glashow [24], Hara [25], and Maki and Ohnuki [26] introduced a second quark c ("charm") with charge $Q = 2/3$ so that the charge-changing weak hadron current became

$$J_\alpha^{\text{hadron}} = \bar{u}\gamma_\alpha(1-\gamma_5)(d\cos\theta + s\sin\theta) + \bar{c}\gamma_\alpha(1-\gamma_5)(-d\sin\theta + s\cos\theta) \qquad (7)$$

Calculating Q_3 for hadrons, one finds that it takes $u \leftrightarrow u$, $c \leftrightarrow c$, $d \leftrightarrow d$, and $s \leftrightarrow s$, i.e., it has *no flavor-changing neutral currents*. There are thus two families of quarks and leptons, with an orthogonal mixing matrix for quarks as shown in Table I.

In 1970, Glashow, Iliopoulos, and Maiani [27] showed that the charmed quark suppressed flavor-changing neutral currents which are induced in higher-order calculations (such as K^0–$\overline{K}^0$ mixing). In the context of the newly developed electroweak theory, Gaillard and Lee [28] demonstrated cancellations due to charm in many rare

kaon decays, and estimated that the charmed quark could have a mass of no more than 2 GeV/c^2. At a conference in the spring of 1974, Glashow offered to eat his hat if charm hadn't been discovered by the next conference in the series [29].

Hints of charm were already emerging at the London (1974) International Conference on High Energy Physics. Jim Cronin and I discussed the anomalous leptons observed at high transverse momenta, some of which turned out to be due to charm decays, and Ben Lee remarked after a talk on neutrino interactions that events with opposite-sign dimuons could be due to production and subsequent semileptonic decay of charm. Gaillard, Lee, and I analyzed various experimental signatures of charm [30] in anticipation of its imminent discovery.

5 THE EMERGENCE OF CHARM

The first hints of charm were provided by short tracks observed in nuclear emulsion by K. Niu and his collaborators in 1971 [31]. However, the discovery which most physicists found convincing was the observation of a narrow $^3S_1$ $c\bar{c}$ ground state called J on the East Coast [32] and ψ on the West Coast [33]. The discovery of the first *charmonium* state (a bound state of a charmed quark and its antiquark) not only validated the charm hypothesis but also demonstrated the reality of quarks and the applicability of QCD to processes involving heavy quarks and large momenta.

QCD was developed as a strong-interaction theory which would preserve current algebra: It had to be a vector-like theory and to be *asymptotically free* [34, 35], with the weakening of interactions at short distances allowing quarks to behave as quasi-free objects when probed in deeply inelastic lepton scattering experiments. Appelquist and Politzer [36] used the newly developed QCD theory to predict that the lowest $c\bar{c}$ $^3S_1$ state had a total width $\Gamma < 1$ MeV as a result of the high order of pertubation theory needed to describe its decay to light hadrons through three *gluons* (quanta of QCD), as shown in Fig. 4. The three-gluon width is proportional to α_s^3, where α_s, the strong fine-structure constant, is about 0.3 at the scale relevant for J/ψ decay, and is further suppressed by the small 3-body phase space. A similar phase space suppression is responsible for the long lifetime of orthopositronium. The observed 3-gluon width is even smaller than anticipated thanks to relativistic effects; the total width is $\Gamma_{\rm tot}(J/\psi) \simeq 0.1$ MeV.

In the more than thiry years since its discovery, charmonium has evolved into a fertile QCD laboratory. There are now more known states for charmonium than for positronium. A snapshot of them is shown in Fig. 5 [37]. The dark arrows denote transitions observed in the past year or two by BaBar, Belle, CDF, and CLEO, and others. The masses and decays of these states serve as a test-bed for techniques of QCD, including non-perturbative methods such as lattice gauge theory which are crucial for tackling many long-distance properties of the states.

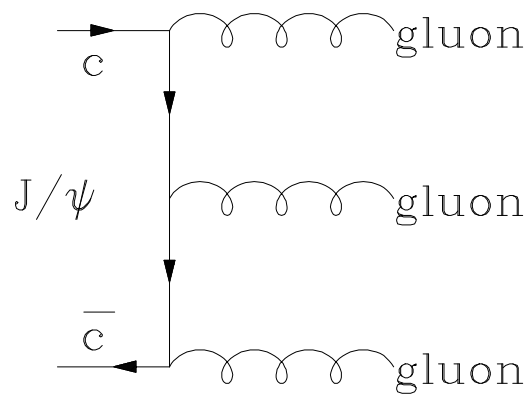

Figure 4: Diagram for J/ψ decay to three gluons.

6 KOBAYASHI-MASKAWA; CP VIOLATION

Kobayashi and Maskawa [9] took charm seriously. They noted that with only (u, d) and (c, s) one could always choose the charge-changing couplings to be real, as in Table I. With an additional pair of quarks (t for "top" and b for "bottom" or "beauty") this was no longer so; there emerged physically meaningful complex phases in couplings describing charge-changing weak interactions, leading to CP violation.

The effect of the Kobayashi-Maskawa phases in neutral kaon decays mainly is to induce CP-violating K^0–$\overline{K}^0$ mixing through box diagrams dominated by the heavy top quark contribution, as in Fig. 6. In one standard parametrization [38] the key non-removable phase occurs in the t-d-W coupling V_{td}, so that CP-violating mixing arises with a strength proportional to $\mathrm{Im}(V_{td}^2)$.

Key predictions of the Kobayashi-Maskawa theory of CP violation are: (1) the existence of the b and t quarks, verified by the discovery in 1977 of the Υ, a $b\bar{b}$ bound state, and its excitations [39], and in 1994 of the top quark t [40]; (2) direct CP violation in neutral kaon decay, affecting the ratio of CP-violating to CP-conserving decays when comparing $K \to \pi^+\pi^-$ with $K \to \pi^0\pi^0$ [41]; (3) large CP violation in B meson decays [42, 43]. The latter phenomenon has been the object of recent studies with asymmetric e^+e^- colliders, an invention of Pier Oddone to allow production of the B mesons in a moving frame so that their decays can be studied with greater resolution [44]. Experiments by the Belle Collaboration at KEK and the BaBar Collaboration at SLAC have led to a wealth of information on B decays, as we shall note presently.

The charge-changing weak transitions among the six quarks of the Kobayashi-Maskawa theory are illustrated in Fig. 7. The couplings are described by a 3×3 unitary *Cabibbo-Kobayashi-Maskawa* (CKM) matrix, a generalization of the 2×2 matrix illustrated in Table I. The approximate values of the CKM matrix elements are $V_{ud} \simeq V_{cs} \simeq 0.974$, $V_{tb} \simeq 1$, $V_{us} \simeq -V_{cd} \simeq 0.226$, $V_{cb} \simeq -V_{ts} \simeq 0.041$, $V_{td} \simeq 0.008e^{-i\ 21^\circ}$, $V_{ub} \simeq 0.004e^{-i\ 60^\circ}$. Here we have adopted a parametrization invented by L. Wolfenstein [38], in which the large phases occur in V_{td} and V_{ub}:

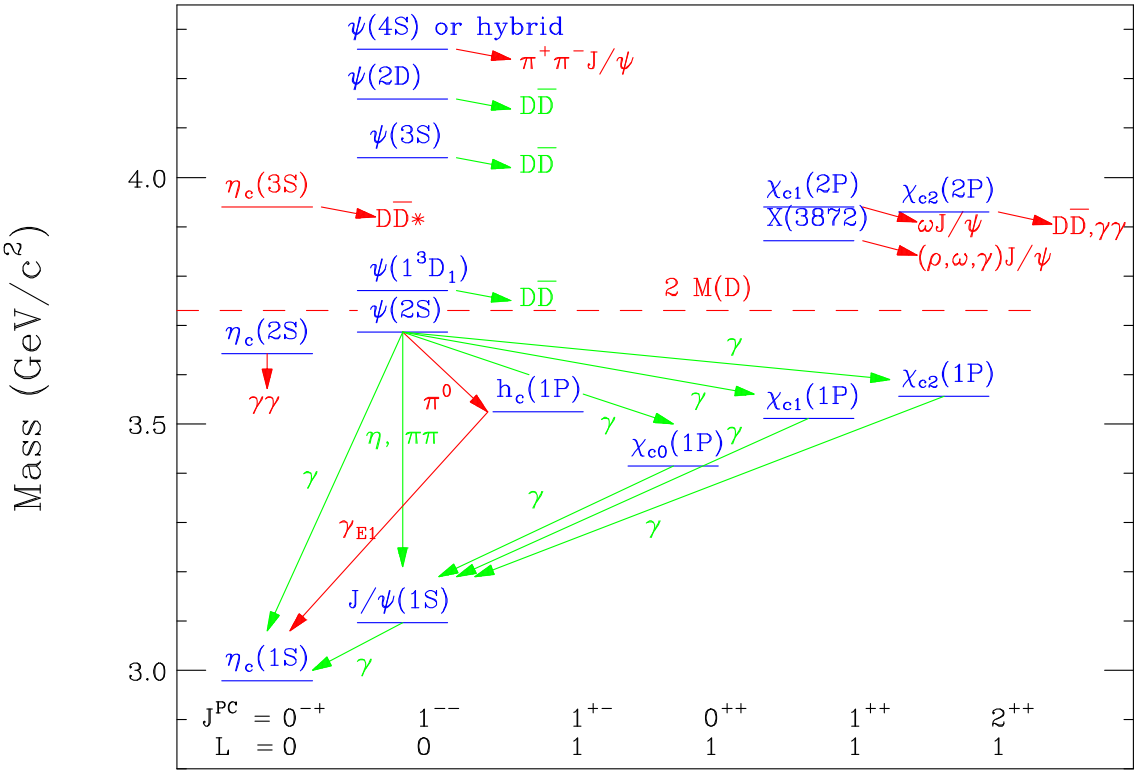

Figure 5: Charmonium spectrum as of 2006.

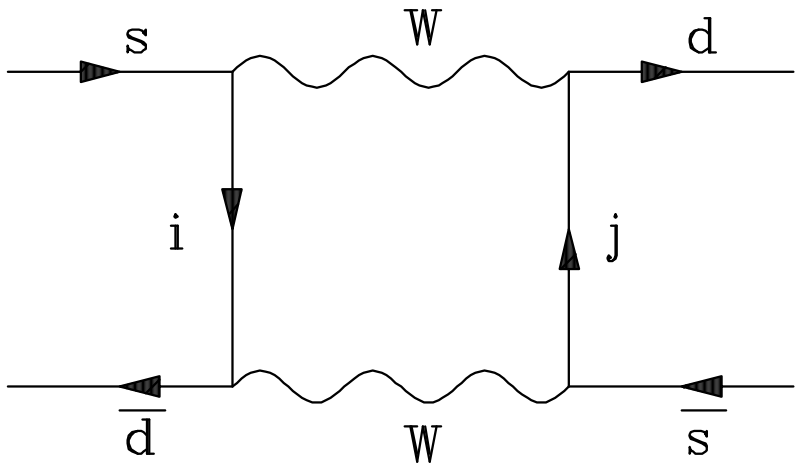

Figure 6: Box diagram describing K^0–$\overline{K}^0$ mixing. Here $i, j = (u, c, t)$.

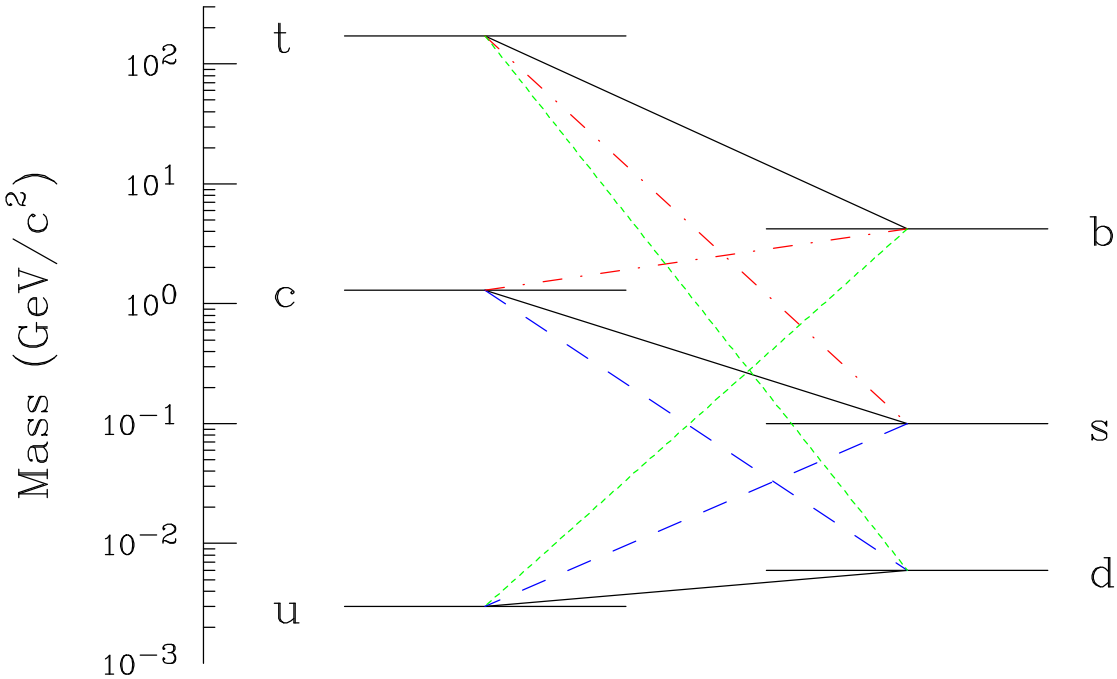

Figure 7: Quarks and the charge-changing weak transitions between them. Relative strengths: 1 (solid), 0.22 (dashes), 0.04 (dotdash), < 0.01 (dotted).

$$V = \begin{bmatrix} V_{ud} & V_{us} & V_{ub} \\ V_{cd} & V_{cs} & V_{cb} \\ V_{td} & V_{ts} & V_{tb} \end{bmatrix} \simeq \begin{bmatrix} 1-\frac{\lambda^2}{2} & \lambda & A\lambda^3(\rho - i\eta) \\ -\lambda & 1-\frac{\lambda^2}{2} & A\lambda^2 \\ A\lambda^3(1-\rho-i\eta) & -A\lambda^2 & 1 \end{bmatrix} \tag{8}$$

No redefinition of the quark phases can get rid of all phases in V. The unitarity of this matrix ($V^\dagger V = 1$) implies (e.g.) $V_{ud}V_{ub}^* + V_{cd}V_{cb}^* + V_{td}V_{tb}^* = 0$ or (rescaling) $(\rho + i\eta) + (1 - \rho - i\eta) = 1$. This relation can be expressed in the form of a *unitarity triangle* in the complex (ρ, η) plane, illustrated in Fig. 8. One learns its shape from various sources:

- B–$\overline{B}$ mixing constrains $|V_{td}|$ and hence $|1 - \rho - i\eta|$.
- Charmless B decays provide information on $|V_{ub}|$ and hence $|\rho - i\eta| = (\rho^2 + \eta^2)^{1/2}$.
- CP-violating mixing in neutral kaon decays constrains $\mathrm{Im}|V_{td}^2|$, as mentioned, and hence provides information on $\eta(1 - \rho)$.

What is remarkable is that all of these (and many other) constraints give a consistent picture of the allowed (ρ, η) region (see, e.g., Ref. [45]). The non-zero phases, and the observation of large B–$\overline{B}$ mixing in 1987 [46], suggested that CP violation in B meson decays would be *large*, as compared with effects of order 10^{-3} in K^0 decays.

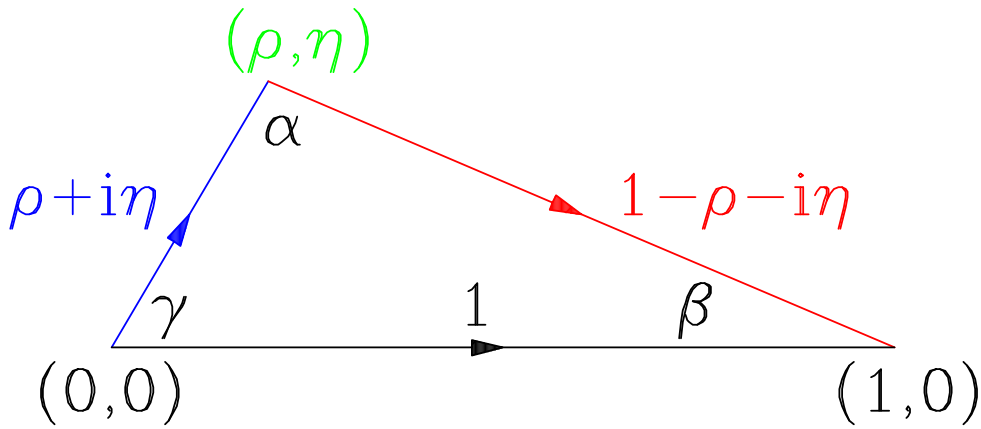

Figure 8: The unitarity triangle.

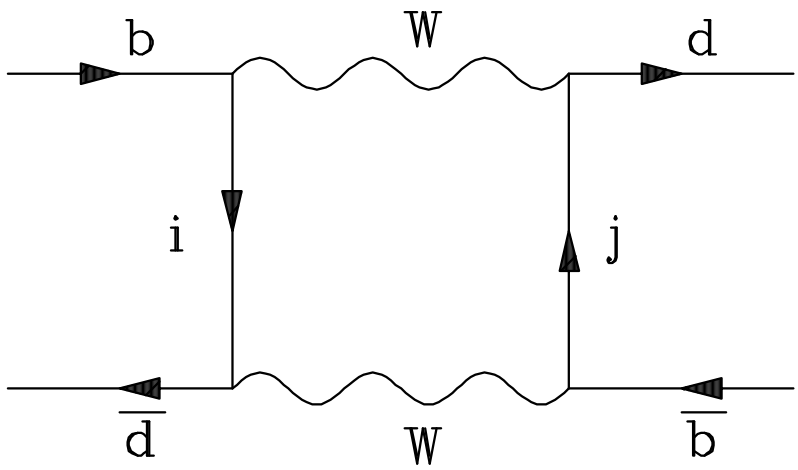

Figure 9: Box diagram describing B^0–$\overline{B}^0$ mixing. Here $i, j = (u, c, t)$.

7 NEUTRAL B'S: MIXING AND CP VIOLATION

The loop diagram of Fig. 9 allows $b\bar{d} \leftrightarrow d\bar{b}$ transitions. The matrix element of this operator at the quark level is governed by $f_B^2 B_B$, where f_B is the B meson decay constant and the parameter B_B describes the degree to which the vacuum intermediate state dominates the $\Delta B = 2$ transition. At present the best information on $f_B^2 B_B$ comes from lattice QCD. With $\Delta m(B^0) \simeq 0.5$ ps^{-1}, one is able to extract $|V_{td}|$ to only about 15% from B^0–$\overline{B}^0$ mixing.

One measures $|V_{ub}|$ through charmless semileptonic B decays, constituting only about 2% of such decays. One finds $|\rho - i\eta| \simeq 0.4 \pm 0.1$, where I prefer to assign fairly conservative errors since the dominant uncertainties in various methods of extracting $|V_{ub}|$ from data are theoretical.

Strange B (B_s–$\overline{B}_s$) mixing is governed by the same diagram as in Fig. 9 but with $d \to s$. Because $V_{ts} \simeq -V_{cb}$ is fairly well known, this measurement ends up providing information mainly on $f_{B_s}^2 B_{B_s}$ and thus, through SU(3), on $f_B^2 B_B$. The mixing has now been observed [47, 48]: for example, the CDF Collaboration finds $\Delta m_s = 17.77 \pm 0.10 \pm 0.07$ ps^{-1}, leading to the constraint $|V_{td}/V_{ts}| = 0.2060 \pm 0.0007\ (\mathrm{exp})^{+0.0081}_{-0.0080}$ (theor) when one uses a value of $\xi \equiv (f_{B_s}\sqrt{B_{B_s}}/f_B\sqrt{B_B}) = 1.21^{+0.047}_{-0.035}$ from lattice QCD [49].

Some fairly precise information is now available about the angles of the unitarity triangle. The CP asymmetry in $B^0 \to J/\psi K_S$ (comparing the rate with that of $\overline{B}^0 \to J/\psi K_S$) measures $\sin 2\beta = 0.674 \pm 0.026$, giving $\beta \simeq (21 \pm 1)^\circ$. The B_s–$\overline{B}_s$ mixing just mentioned constrains γ to be within a few degrees of $\simeq 60^\circ$. The asymmetric e^+e^- colliders and other experiments seek to produce enough B's to tell whether this picture is self-consistent. So far, it seems to be, but there are a few things to watch. First, we sketch the way in which $B^0 \to J/\psi K_S$ provides information on the angle β.

7.1 CP asymmetry in $B^0 \to J/\psi K_S$

There is a resonance $\Upsilon(4S)$ just above $B\bar{B}$ threshold. If one produces this resonance in e^+e^- collisions, the $B^0\overline{B}^0$ pair is produced in a correlated state. As a result of B^0–$\overline{B}^0$ mixing, one must determine the relative proper times at which each B meson decays in order to properly "tag" the flavor of the produced B meson. The asymmetric electron and positron energies at the KEK and SLAC "B factories" give the center of mass a "boost," allowing for easier detection of decay vertices.

The decay rate of an initially-produced B^0 or $\overline{B}^0$ is then given by

$$\Gamma(t) \left\{ \begin{array}{c} B^0_{t=0} \\ \overline{B}^0_{t=0} \end{array} \right\} = e^{-\Gamma t}[1 \mp \sin(2\beta)\sin\Delta m t] \tag{9}$$

as a function of time, as illustrated in Fig. 10. Here the decay rate is $\Gamma \simeq 0.65 \times 10^{12}$ s^{-1}, while the mixing amplitude is $\Delta m \simeq 0.5 \times 10^{12}$ s^{-1}. The first term describes direct decay to $J/\psi K_S$, while the second describes decay through mixing. The B^0–$\overline{B}^0$ mixing amplitude has a phase 2β. The time-integrated decay asymmetry

$$\frac{\Gamma(\overline{B}^0_{t=0} \to J/\psi K_S) - \Gamma(B^0_{t=0} \to J/\psi K_S)}{\Gamma(\overline{B}^0_{t=0} \to J/\psi K_S) + \Gamma(B^0_{t=0} \to J/\psi K_S)} \tag{10}$$

would be maximal ($= \frac{1}{2}\sin(2\beta) \simeq 0.34$) if $\Delta m = \Gamma$; it is 97% of that.

7.2 Time-dependent CP asymmetries

The decay of a B^0 to a CP eigenstate f can proceed either directly, via the amplitude A shown in Fig. 11, or via mixing with a $\overline{B}^0$, followed by the decay $\overline{B}^0 \to f$ described by the amplitude $\bar{A}$. The resulting time-dependence in the most general case has the

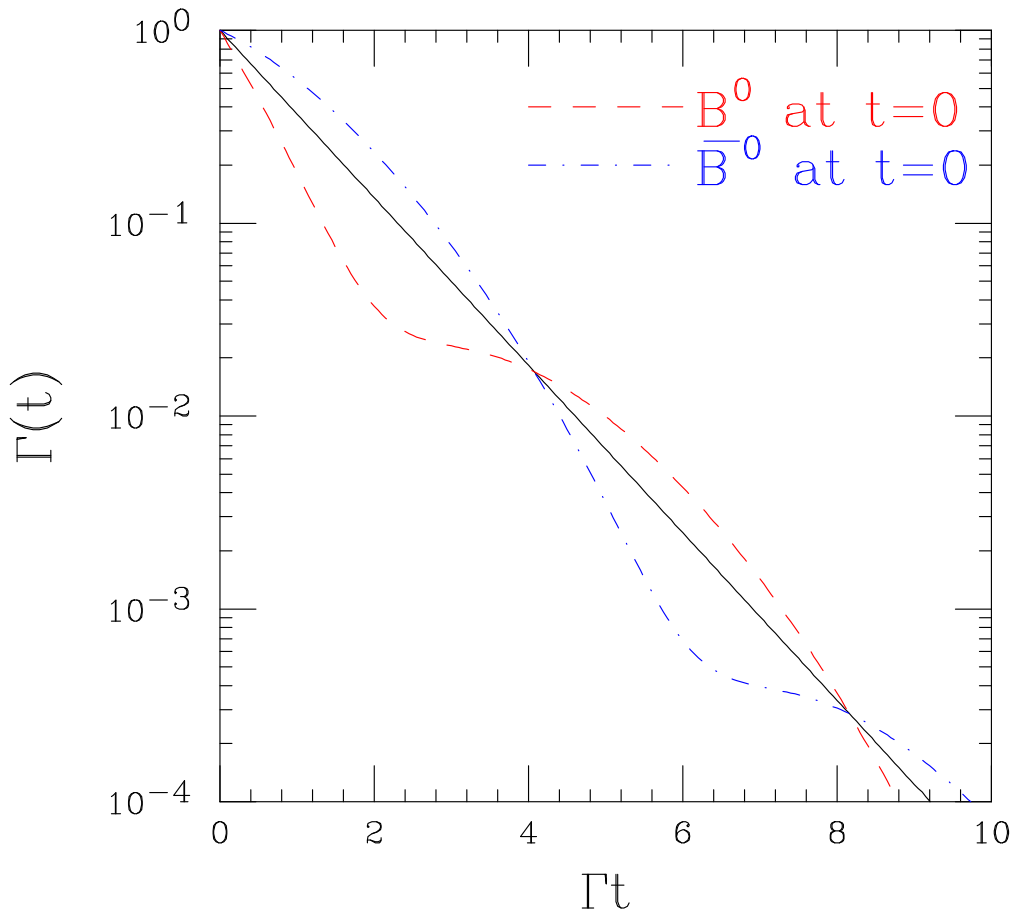

Figure 10: Oscillations in $B^0(t)$ or $\overline{B}^0(t)$ decays to $J/\psi K_S$.

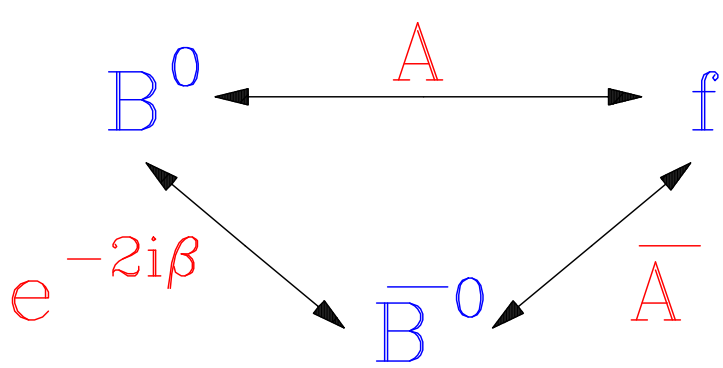

Figure 11: Interference of decay and mixing in B^0 decays to a final state f.

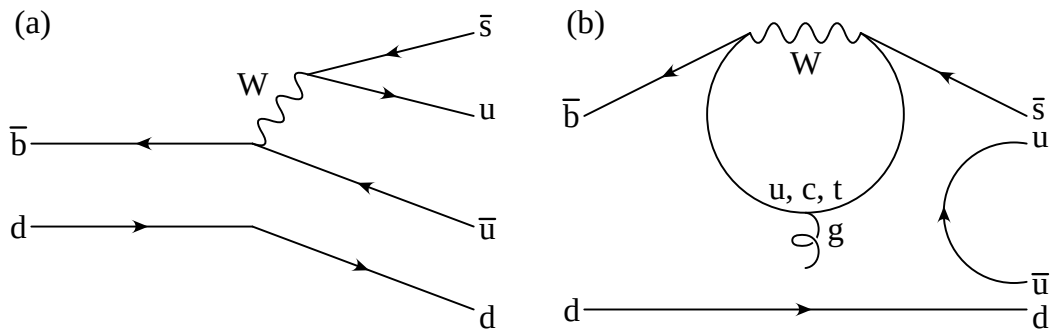

Figure 12: Diagrams describing $B^0 \to \bar{s}u\bar{u}d$ decays. (a) Tree; (b) "penguin."

form

$$\Gamma[B^0(t) \to f] \sim e^{-}\Gamma t \; [\cosh(\Delta\Gamma t/2) - D \; \sinh(\Delta\Gamma t/2) + C\cos(\Delta m t) - S\sin(\Delta m t)] \tag{11}$$

with $C^2 + D^2 + S^2 = 1$, where

$$\lambda \equiv e^{-2i\beta}\frac{\bar{A}}{A} \; , \quad S \equiv \frac{2\mathrm{Im}\lambda}{1+|\lambda|^2} \; , \quad C \equiv \frac{1-|\lambda|^2}{1+|\lambda|^2} \; , \quad D \equiv \frac{2\mathrm{Re}\lambda}{1+|\lambda|^2} \; . \tag{12}$$

These relations are reminiscent of Eqs. (1) and (2) for nonleptonic hyperon decay involving the two complex amplitudes (s, p), or Stokes parameters (I, U, V, Q) describing radiation polarization amplitudes $(E_{\|}, E_{\perp})$:

$$D \Leftrightarrow \alpha \Leftrightarrow U/I \; , \quad S \Leftrightarrow \beta \Leftrightarrow V/I \; , \quad C \Leftrightarrow \gamma \Leftrightarrow Q/I \; . \tag{13}$$

For the B^0, $\Delta\Gamma$ is small; so one measures S, C with $S^2 + C^2 \leq 1$. When A is dominated by a single weak amplitude one has

$$|\lambda| = 1 \quad , \quad C = 0 \quad , \quad S = \pm\sin[2\beta + \mathrm{Arg}(A/\bar{A})] \quad . \tag{14}$$

7.3 Strange penguins?

A number of B decay processes involving the virtual transition $\bar{b} \to \bar{s}$ appear to be dominated by the "strange penguin" amplitude. Diagrams illustrating contributions to such decays are shown in Fig. 12. The name arose because the loser of a darts game in a pub near CERN in 1977 had agreed to use "penguin" in his next paper [50].

For B decays dominated by the $\bar{b} \to \bar{s}$ penguin, one expects the coefficient S of the $\sin\Delta m t$ decay rate modulation in Eq. (11) to be $\pm\sin 2\beta = 0.674 \pm 0.026$ as for $B^0 \to J/\psi K_S$, where the $\pm$ sign denotes minus the CP eigenvalue of the final state. The observed values of $\sin(2\beta)_{\mathrm{eff}}$ for many such processes fall a bit below this value, as illustrated in Table II [51]. If deviations are due to new physics, should they be the same in each case?

Table II: Values of $\pm S = \sin(2\beta)_{\text{eff}}$ for some B decays dominated by the $\bar{b} \to \bar{s}$ penguin amplitude.

Final state	BaBar (SLAC)	Belle (KEK)	Average
$K_S\pi^0$	$0.33 \pm 0.26 \pm 0.04$	$0.33 \pm 0.35 \pm 0.08$	0.33 ± 0.21
$K_S\eta'$	$0.58 \pm 0.10 \pm 0.03$	$0.64 \pm 0.10 \pm 0.04$	0.59 ± 0.08
$K_S\phi$	$0.12 \pm 0.31 \pm 0.10$	$0.50 \pm 0.21 \pm 0.06$	0.39 ± 0.18

8 UNFINISHED BUSINESS

In the 110 years since Becquerel, experiment and theory have made great strides in weak-interaction physics. Rather than concluding, let me indicate some questions for the future.

8.1 B decays involving $\bar{b} \to \bar{s}$ "penguin" diagrams

One expects CP asymmetry parameters $\pm S = \sin(2\beta)_{\text{eff}} = 0.674 \pm 0.026$ in $B^0 \to K^0\pi^0$, $B^0 \to \eta' K^0$, $B^0 \to \phi K^0$. These and other related $\bar{b} \to \bar{s}$ penguin processes give an average $\sim 0.52 \pm 0.05$ [51], 2.6σ below the expected value. Standard Model deviations from the nominal value have been calculated or bounded and are expected to be small, less than 0.05 in many explicit calculations and less than about 0.1 under very general circumstances [52]. We are watching the situation with interest.

8.2 Electroweak theory requires a Higgs boson

Current thinking puts it just above the reach of recently terminated LEP experiments. The CERN Large Hadron Collider and possibly the Fermilab Tevatron will have a shot at it.

8.3 Pattern of quark masses and mixings

Quark masses and mixings probably originate from the same physics, but there seem to be no good ideas for understanding their pattern. This is a central question facing particle physics, and the community's inability to solve it has led to a widespread feeling that it might be a question with no fundamental answer, such as the radii of the planetary orbits. I do not share this pessimism. The emerging pattern of neutrino masses and mixings will probably provide important clues.

ACKNOWLEDGMENTS

I would like to thank Jim Cronin for uncovering the nature of the weak interaction through his studies of strange particle decays; for helping to prove the importance

of quarks via his experiments on particle production at high transverse momenta; for his exciting explorations of cosmic rays at the highest energies; and for making the University of Chicago such a wonderful place to do physics. I am grateful to Jim Pilcher for extending the invitation to speak at this symposium and for helpful comments. This work was supported in part by the United States Department of Energy through Grant No. DE FG02 90ER40560.

References

[1] H. Becquerel, *Collected Papers*, presented to Jim Cronin by his colleagues on the occasion of his 75th birthday.

[2] J. H. Christenson, J. W. Cronin, V. L. Fitch and R. Turlay, Phys. Rev. Lett. **13**, 138 (1964).

[3] W. Pauli, as quoted in A. Pais, *Inward Bound* (Oxford University Press, New York, 1986), p. 315.

[4] C. L. Cowan *et al.*, Science **124**, 103 (1956).

[5] R. H. Dalitz, Phil. Mag. **44**, 1068 (1953).

[6] M. L. Goldberger and S. B. Treiman, Phys. Rev. **110**, 1178 (1958).

[7] N. Cabibbo, Phys. Rev. Lett. **10**, 531 (1963).

[8] M. Gell-Mann, Phys. Rev. **125**, 1067 (1962).

[9] M. Kobayashi and T. Maskawa, Prog. Theor. Phys. **49**, 652 (1973).

[10] M. Gell-Mann and A. H. Rosenfeld, Ann. Rev. Nucl. Part. Sci. **7** (1957) 407.

[11] R. L. Cool, B. Cork, J. W. Cronin, and W. A. Wenzel, Phys. Rev. **114**, 912 (1959).

[12] J. W. Cronin and O. E. Overseth, Phys. Rev. **129**, 1795 (1963).

[13] W. M. Yao *et al.* [Particle Data Group], J. Phys. G **33**, 1 (2006).

[14] E. Engels, these Proceedings.

[15] M. Gell-Mann and M. Levy, Nuovo Cim. **16**, 705 (1960).

[16] T. Alexopoulos *et al.* [KTeV Collaboration], Phys. Rev. Lett. **93**, 181802 (2004).

[17] T. Alexopoulos *et al.* [KTeV Collaboration], Phys. Rev. D **70**, 092007 (2004); E. Abouzaid *et al.* [KTeV Collaboration], Phys. Rev. D **74**, 032004 (2006) [Erratum-ibid. D **74**, 039905 (2006)].

[18] P. Basile, J. W. Cronin, B. Thevenet, R. Turlay, S. Zylberajch and A. Zylbersztejn, Phys. Lett. **26B**, 542 (1968); Phys. Rev. D **2**, 78 (1970).

[19] J. W. Cronin, in *Proceedings of the 1967 International Conference on Particles and Fields*, University of Rochester, Rochester, New York, August 28 – September 1, 1967, edited by C. R. Hagen, G. Guralnik, and V. S. Mathur (Wiley-Interscience, New York, 1967), p. 3; in *14th International Conference on High Energy Physics – Proceedings*, Vienna, 28 August – 5 September, 1968, edited by J. Prentki and J. Steinberger (European Organization for Nuclear Research, Geneva, 1968), p. 281.

[20] S. L. Glashow, Nucl. Phys. **22**, 579 (1961).

[21] S. Weinberg, Phys. Rev. Lett. **19**, 1264 (1967).

[22] A. Salam, in *Proc. of the Eighth Nobel Symp.*, edited by N. Svartholm (Stockholm: Almqvist and Wiksell / New York: Wiley), p. 367.

[23] H. Yukawa, Proc. Phys.-Math. Soc. Japan **17**, 48 (1935); O. Klein, in *Les Nouvelles Théories de la Physique* (Paris: Inst. Int. de Coöperation Intellectuelle, 1939), p. 81; J. Schwinger, Ann. Phys. (N.Y.) **2**, 407 (1957); S. A. Bludman, Nouvo Cim. **9**, 433 (1958); G. Feinberg, Phys. Rev. **110**, 1482 (1958); S. L. Glashow, Nucl. Phys. **10**, 107 (1959); M. Gell-Mann, Rev. Mod. Phys. **31**, 834 (1959); T. D. Lee and C. N. Yang, Phys. Rev. **119**, 1410 (1960).

[24] J. D. Bjorken and S. L. Glashow, Phys. Lett. **11**, 255 (1964).

[25] Y. Hara, Phys. Rev. **134**, B701 (1964).

[26] Z. Maki and Y. Ohnuki, Prog. Theor. Phys. **32**, 144 (1964).

[27] S. L. Glashow, J. Iliopoulos and L. Maiani, Phys. Rev. D **2**, 1285 (1970).

[28] M. K. Gaillard and B. W. Lee, Phys. Rev. D **10**, 897 (1974).

[29] S. L. Glashow, AIP Conf. Proc. **21**, 387 (1974).

[30] M. K. Gaillard, B. W. Lee and J. L. Rosner, Rev. Mod. Phys. **47**, 277 (1975).

[31] K. Niu, E. Mikumo and Y. Maeda, Prog. Theor. Phys. **46**, 1644 (1971).

[32] J. J. Aubert *et al.* [BNL E598 Collaboration], Phys. Rev. Lett. **33**, 1404 (1974).

[33] J. E. Augustin *et al.* [SLAC-SP-017 Collaboration], Phys. Rev. Lett. **33**, 1406 (1974).

[34] D. J. Gross and F. Wilczek, Phys. Rev. Lett. **30**, 1343 (1973); Phys. Rev. D **8**, 3633 (1973); *ibid.* **9**, 980 (1974).

[35] H. D. Politzer, Phys. Rev. Lett. **30**, 1346 (1973); Phys. Rept. **14**, 129 (1974).

[36] T. Appelquist and H. D. Politzer, Phys. Rev. Lett. **34**, 43 (1975).

[37] J. L. Rosner, hep-ph/0609195, submitted to J. Phys. G.

[38] L. Wolfenstein, Phys. Rev. Lett. **51**, 1945 (1983).

[39] S. W. Herb *et al.*, Phys. Rev. Lett. **39**, 252 (1977); W. R. Innes *et al.*, Phys. Rev. Lett. **39**, 1240 (1977) [Erratum-ibid. **39**, 1640 (1977)].

[40] F. Abe *et al.* [CDF Collaboration], Phys. Rev. Lett. **73**, 225 (1994); Phys. Rev. D **50**, 2966 (1994); Phys. Rev. Lett. **74**, 2626 (1995); S. Abachi *et al.* [D0 Collaboration], Phys. Rev. Lett. **74**, 2632 (1995).

[41] B. Winstein, these Proceedings.

[42] A. B. Carter and A. I. Sanda, Phys. Rev. Lett. **45**, 952 (1980); Phys. Rev. D **23**, 1567 (1981).

[43] I. I. Y. Bigi and A. I. Sanda, Nucl. Phys. B **193**, 85 (1981).

[44] P. Oddone, Annals N. Y. Acad. Sci. **578**, 237 (1989).

[45] A. J. S. Smith, these Proceedings.

[46] H. Albrecht *et al.* [ARGUS Collaboration], Phys. Lett. B **192**, 245 (1987).

[47] A. Abulencia *et al.* [CDF Collaboration], hep-ex/0609040, superseding an earlier result: A. Abulencia *et al.* [CDF Collaboration], Phys. Rev. Lett. **97**, 062003 (2006).

[48] V. M. Abazov *et al.* [D0 Collaboration], Phys. Rev. Lett. **97**, 021802 (2006).

[49] M. Okamoto, PoS **LAT2005**, 013 (2006), hep-lat/0510113.

[50] J. R. Ellis, M. K. Gaillard, D. V. Nanopoulos and S. Rudaz, Nucl. Phys. B **131**, 285 (1977) [Erratum-ibid. B **132**, 541 (1978)].

[51] M. Hazumi, plenary talk at 33rd International Conference on High Energy Physics (ICHEP06), Moscow, Russia, 26 July – 2 August 2006.

[52] M. Gronau, J. L. Rosner and J. Zupan, hep-ph/0608085, submitted to Phys. Rev. D.